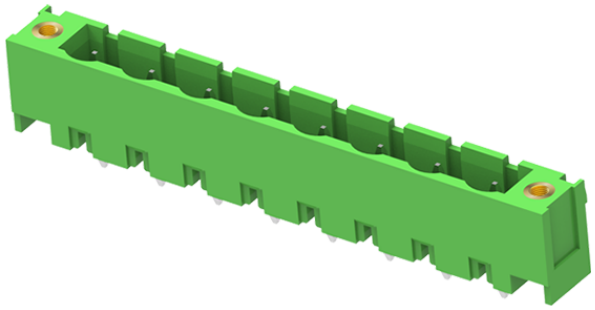

Product Type: Plug-in terminal-Socket

Product Name:MC-PA7.5V05-F-0002

Product Description: Pitch: 7.5mm Rated Voltage：630V Rated Current: 18A

colour：customizable

Product Size

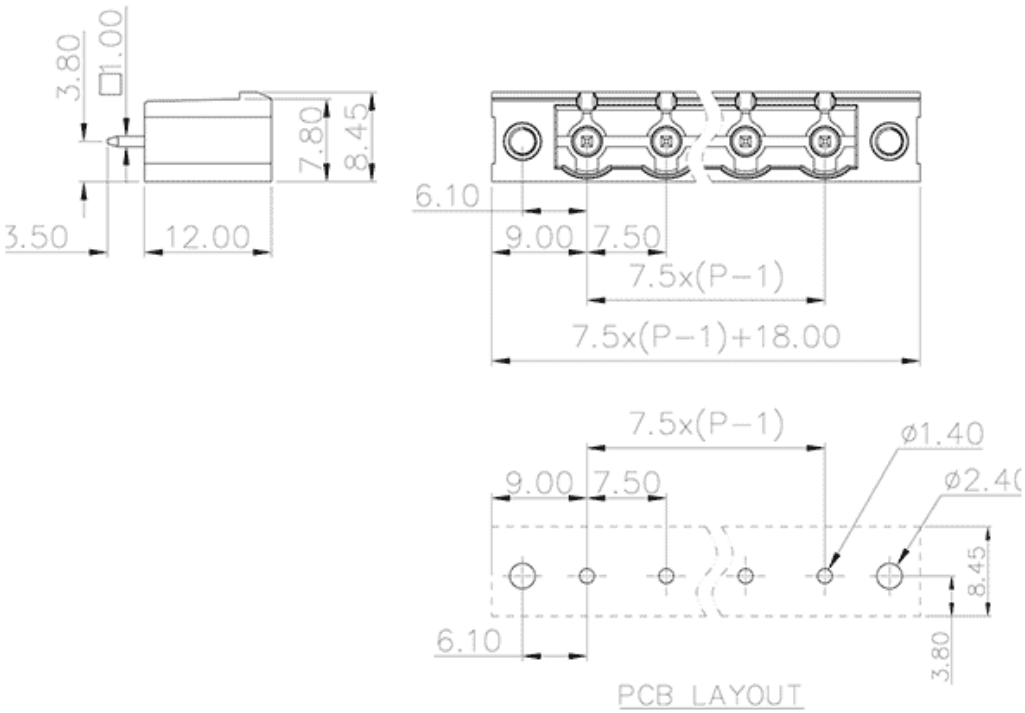

Parameters

SUPU ID	MC-PA7.5V05-F-0002
Pitch	7.5
Number of levels	Single layer
Number of connections	5

Connection method	-
Protection Level	IP20
Operating temperature range	-40~+105°C
Insulation material	PA66
Insulation material group	I
Contact material	Copper alloy
Contact plating	Sn,Plated
Color	Green/Black/Blue/Grey/Orange/Red

Technical data

IEC Rated Current	630V
IEC Rated Voltage	18A
Overvoltage category	III III II
Degree of pollution	3 2 2
Rated impulse voltage	6.0KV 6.0KV 6.0KV
UL Rated Current	15A - 10A
UL Rated Voltage	300V - 300V
Conductor cross section rigid	-
Conductor cross section flexible	-
Conductor cross section flexible,with furrule	-
Locking screw Specification	-
Locking screw torque	-
Fixed Screw Specification	-
固定螺钉扭矩	-

Stripping length	-
Use group	B/C/D
Rated cross section	-

Commercial data

Order No	MC-PA7.5V05-F-0002

Ningbo SUPU Electronics Co., Ltd.

Address: No. 150, Xinxing 4th Road, High-tech Industrial Development Zone,

Cixi City, Zhejiang Province, China

Zip code: 315303

Switchboard: +86 574-63288158

Fax: +86 574-63288170

E-mail:supucontact@supu.cn

Service Hotline: 400-626-6336

Wechat

The right to modify data belongs to SUPU.